ROTRONIC APPLICATION NOTE

Application note: N°F013

April 2012

Wind turbines

Wind Farm

Facts & figures:

There is over 200 GW (Giga Watts) of installed wind energy capacity in the world

The Global Wind Energy Council (GWEC) has forecasted a global capacity of 2.300 GW by 2030. This will cover up to 22% of the global power consumption.

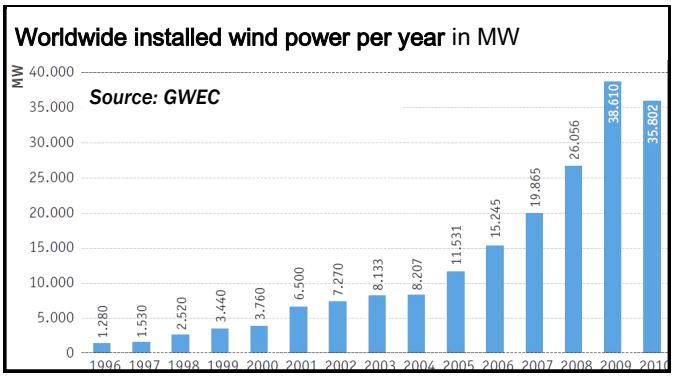

Discussed in this edition:

Wind Energy in general

The future is very encouraging for wind power. The technology is growing exponentially due to the current power crisis and the ongoing discussions about nuclear power plants. Wind turbines are becoming more efficient and are able to produce increased electricity capacity given the same factors.

Converting wind power into electrical power:

A wind turbine converts the kinetic energy of wind into rotational mechanical energy. This energy is directly converted, by a generator, into electrical energy. Large wind turbines as shown in the picture, have typically a generator installed on top of the tower. Commonly, there is also a gear box to adapt the speed. Various sensors for wind speed, humidity and temperature measurement are placed inside and outside to monitor the climate. A controller unit analyses the data and adjusts the yaw and a pitch drive to the correct position. See the schematic below.

The formula for wind power density:

$W = d \times A^2 \times V^3 \times C$ where :

d: defines the density of the air. Typically it's 1.225Kg/m^3 This is a value which can vary depending on air pressure, temperature and humidity.

A^2: defines the diameter of the turbine blades. This value is quite effective with its squared relationship. The larger a wind turbine is the more energy can be harnessed.

V^3: defines the velocity of the wind. The wind speed is the most effective value with its cubed relationship.

In reality, the wind is never same speed and a wind turbine is only efficient at certain wind speeds. Usually 10 mph (16 km/h) or greater is most effective. At too high wind speed the wind turbine can break. The efficiency is therefore held to a constant of around of 10mph.

C: defines the constant which is normally 0.5 for metric values. This is actually a combination of two or more constants depending on the specific variables and system of units that is used.

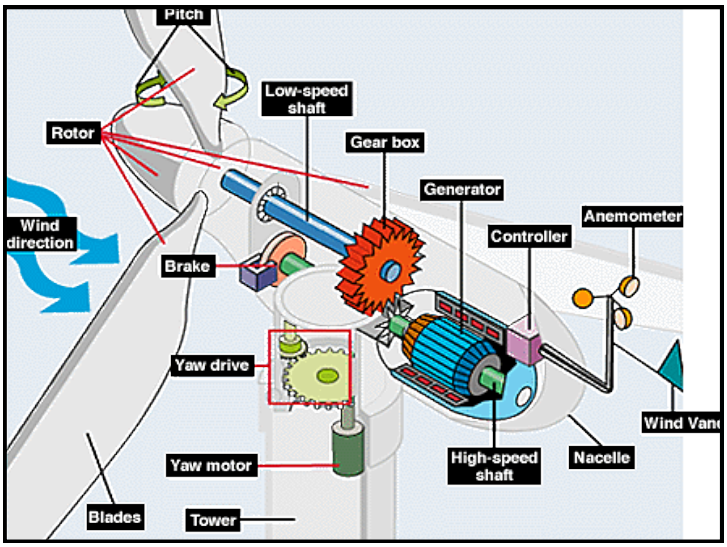

rotronic

LEADING IN HUMIDITY MEASUREMENT

ROTRONIC APPLICATION NOTE

Application note: N°F013

April 2012

Why the need to measure the local climate?

To forecast the power of the wind over a few hours or days is not an easy task.

Wind farms can extend over kilometres of land or offshore areas where the climate and the wind speed can vary substantially, especially in hilly areas. Positioning towers only slightly to the left or right can make a significant difference because the wind velocity can be increased due to the topography. Therefore, wind mapping has to be performed in order to define if a location is correct for the wind farm. Such wind maps are usually done with Doppler radars which is equipped with stationary temperature and humidity sensors. These sensors improve the average accuracy.

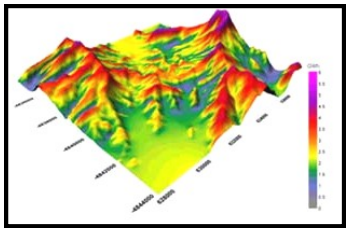

Once wind mapping has been carried out over different seasons, wind turbine positions can be determined. Each turbine will be equipped with sensors for wind direction and speed, temperature and humidity. Using all these parameters, the turbine characteristics plus the weather forecast, a power prediction can be made using complex mathematics.

The final power value will be calculated in "watts" which will be supplied into power grids, (see schematic on the right). Electricity for many houses or factories can be powered by the green energy.

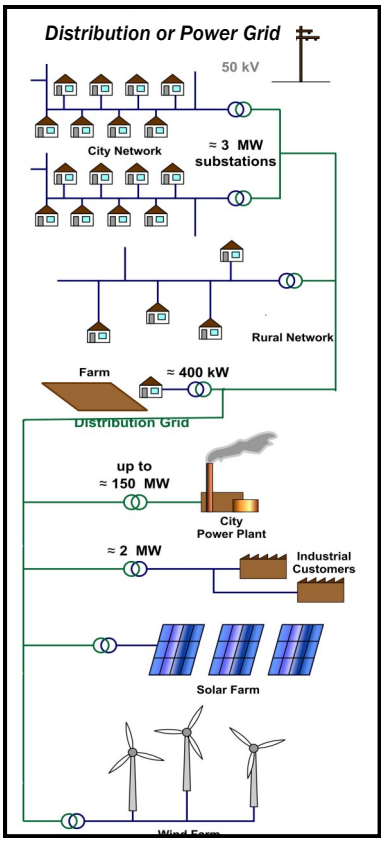

Why the need to measure inside a wind turbine?

Wind farms are normally installed in areas with harsh environments where strong winds are common. Salty air, high humidity and condensation are daily issues for wind turbines.

Normal ventilation is not sufficient to ensure continuous operation. The inside climate has to be monitored and dehumidified by desiccant to protect the electrical components against short circuits and the machinery against corrosion.

These measurements are required to ensure continuous operation and reduce maintenance costs.

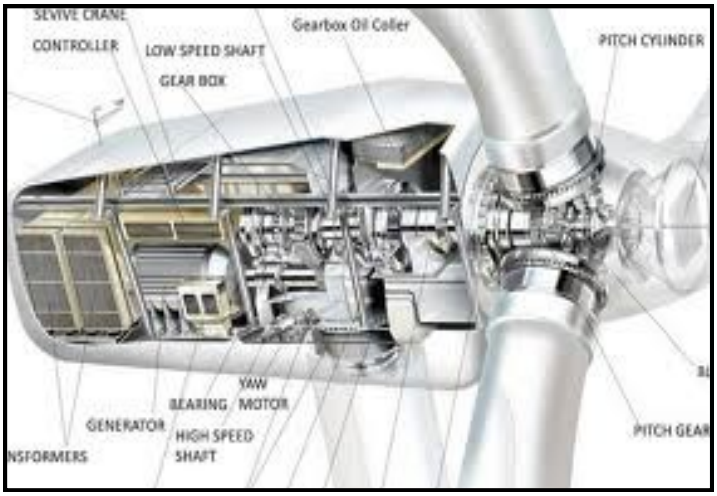

rotronic

LEADING IN HUMIDITY MEASUREMENT

Application note: N°F013

April 2012

What solutions can Rotronic offer?

Rotronic offers sensor with exceptional accuracy and a wide range of products for meteorological. applications and for monitoring indoor climates.

Low sensor drift and long-term stability are perfect in wind energy applications where reduced maintenance reduces the operational cost.

The wide range of networking possibilities including RS485, USB, LAN and probe extension cables up to 100m allows measurements in remote or hard to reach places. Validated Rotronic HW4 software makes it easy to analyse the data or it can be exported into Excel for reporting and further processing.

The ability to calibrate accurately using humidity standards on site confirms sensor performance.

AC1000 weather shield with meteo probe and cable

Rotronic products:

Humidity & Temperature probes for *Meteorology:*

- ***AC1000 weather shield***
  Naturally ventilated shield
  9 plates.
- ***HC2-S3 Probe***
  Standard meteorology humidity & temperature probe, white
  -50...100 °C,
  0…100 %rh,
  ±0.8 %rh and ±0.1 K…
- ***HC2-S3C03***
  Humidity sensor for meteorology with open ends and 3 m cable,
  -50...100 °C,
  0…100 %rh,
  ±0.8 %rh and ±0.1 K
- ***HC2-S probe***
  Standard humidity & temperature probe, Black
  -50...100 °C,
  0…100 %rh,
  ±0.8 %rh and ±0.1 K…

Transmitters and cabling:

- ***E3-0Xxx Extension cable for HC2 probes***
  Various options:
  Passive Cable: 1,2 or 5m
  Active Cable: 10..100 m
  Interfaces: USB, RS232, RS-485, Modbus, Ethernet
  Supply voltage up 40 VDC
  Cable. Open ends for third party OEM use.
- ***HF3 series transmitters***
  Fixed probe and 2 or 3/4 wire configuration,
  Housing: wall or duct mount
  Various analogue outputs,
  Dew and frost point calculations available…

Calibration:

- ***Calibration device***
  Stainless steel ,
  Ø 5, 15, 20 mm

HC2-S3C03 cable probe

HF3 duct type transmitter

Customer benefits:

Accuracy:

Rotronic gives you the best accuracy on the market. The outstanding accuracy and low drift of our probes ensures a constant and stable internal climate in the wind turbine that is directly linked to the need for constant operation. For measuring the external climate the outstanding sensing performance provides a better weather and power-forecast for the distribution grid .

Networking with Rotronic products is an easy affair! With all there is a range of the different communication methods available, and various analogue/digitals output signals. Plus, various interfaces and extension cables up to 100m for your drying control unit or any third party monitoring system.

Long term stability: With long term sensor stability of under 1 %rh per year (depending on the environment), Rotronic offers the possibility to "plug & play": install the device and leave it. We would however recommend frequent spot checks calibration.

Calibration and adjustment:

Calibration and adjustment is very easy with the Rotronic product range. As the probe interface is digital, the whole calibration procedure can be done via a PC, or directly from the device with the help of Rotronic humidity standards. Rotronic also offers a calibration sensor.

ER-15 calibration device

Traceable Swiss Calibration Service (SCS) salt solutions

rotronic

LEADING IN HUMIDITY MEASUREMENT

Contact us:

Rotronic is represented in more than 40 countries around the world. An up to date list of all our partners is available at www.rotronic-humiditiy.com/international

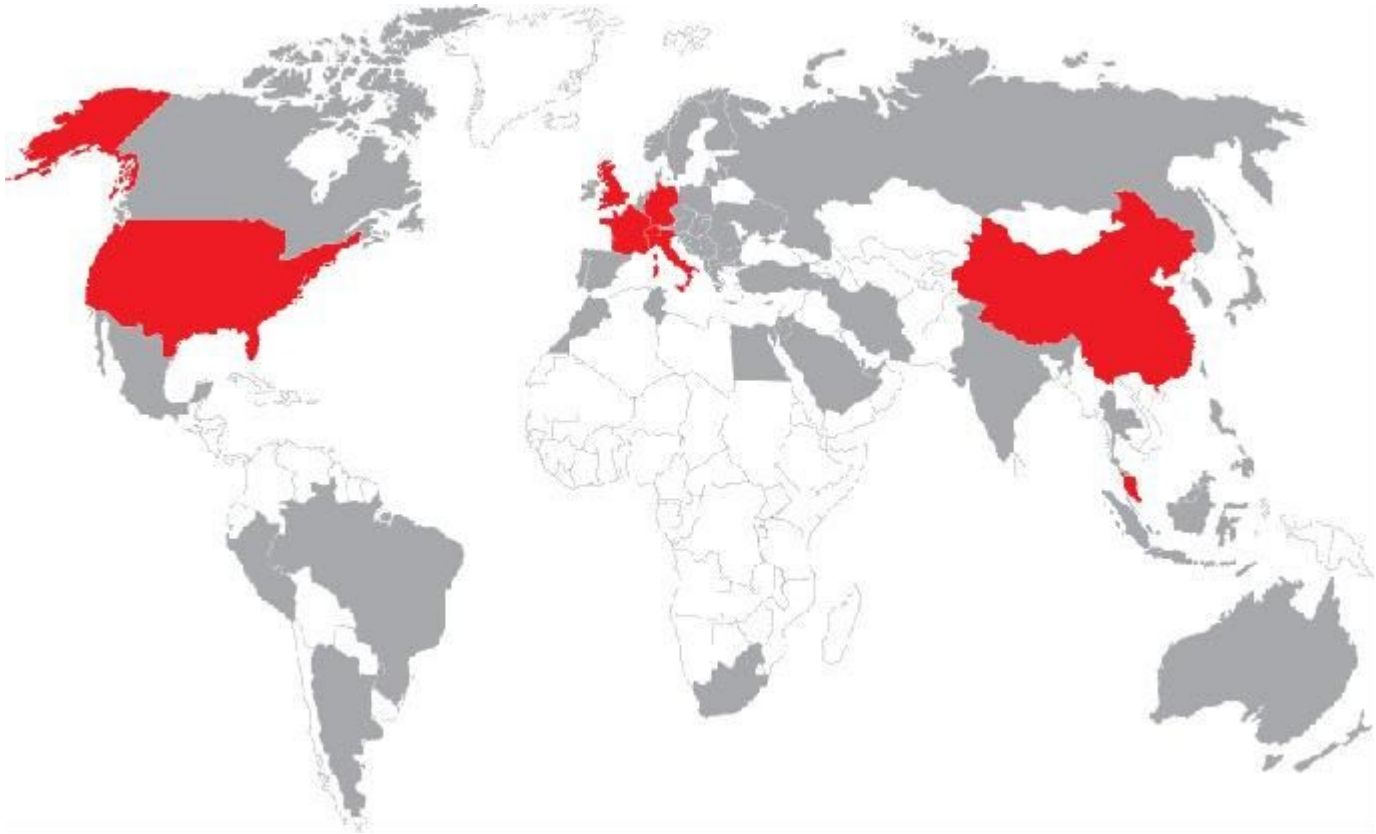

SWITZERLAND
ROTRONIC AG
Grindelstrasse 6,
CH-8303 Bassersdorf
Phone: +41 44 838 11 44
Fax: +41 44 837 00 73
www.rotronic-humidity.com

FRANCE
ROTRONIC Sarl
56, Bld. De Courcerin,
F-77183 Croissy-Beaubourg.
Phone: +33 1 60 95 07 10
Fax: +33 1 60 17 12 56
www.rotronic.fr

SINGAPORE
ROTRONIC South East Asia Pte Ltd
16 Kallang Place #07-04
Singapore 339156
Phone: +65 6294 6065
Fax: +65 6294 6096
www.rotronic.com.sg

GERMANY
ROTRONIC Messgeräte GmbH
Einsteinstrasse 17-23
DE-76275 Ettlingen
Phone: +49 7243 383 250
Fax: +49 7243 383 260
www.rotronic.de

UK
ROTRONIC Instruments UK Ltd.
Crompton Fields, Crompton Way
Crawley, West Sussex, RH10 9EE
Phone: +44 1293 57 10 00
Fax: +44 1293 57 10 08
www.rotronic.co.uk

ITALY
ROTRONIC Italia srl
Via Repubblica di San Marino, 1
I-20157 Milano (MI)
Phone: +39 02 39 00 71 90
Fax: +39 02 33 27 62 99
www.rotronic.it

USA
ROTRONIC Instrument Corp.
Suite 150, 135 Engineers Road, Haup-
pauge, NY 11788
Phone: +1 631 427 38 98
Fax: +1 631 427 39 02
www.rotronic-usa.com

CHINA
ROTRONIC Shanghai Rep. Office
2B, Zao Fong Universe Building, No. 1800
Zhing
Shan West Road, Shanghai 200233
China
Phone: +86 21 644 03 55
Fax: +86 21 644 03 77
www.rotronic-humidity.cn

rotronic
LEADING IN HUMIDITY MEASUREMENT