ROTRONIC APPLICATION NOTE

Application note: N° F027

June 2013

Differential Pressure in Cleanrooms

Facts:

- A differential pressure of 400 Pa correlates with a force of 40 kg/m²

- ISO14644 Part 1 requires regular monitoring of the differential pressure in cleanrooms

- A class 1 cleanroom requires 360 - 540 complete air changes **every** hour

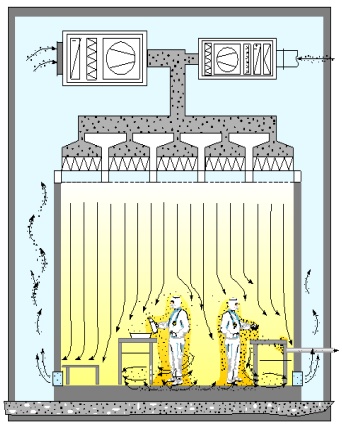

Overpressure in a cleanroom

Discussed in this edition:

Differential pressure - The key parameter

Differential pressure **(Δp)** is simply the measured pressure deviation between two points in different pressure systems.

Beside temperature and relative humidity, **Δp** is arguably the key parameter, which in combination with both of them, ensures the correct operation and efficiency of a cleanroom.

Since a cleanroom's main purpose is to avoid any sort of contamination by particulates, a constant airflow has to be maintained.

Using a well-balanced system of controlled air inlets and leaks, designers ensure that the high airflow removes airborne particulates caused by workers and machines in these highly sensitive environments. The result is an overpressure system.

The pressure must be controlled precisely to ensure overall functionality.

A low pressure difference will cause contamination in the cleanroom - too much may trigger unwanted turbulence and waste energy.

Different classes of cleanroom require a specified number of complete air changes every hour. This is another reason that **Δp** is the key quantatitive parameter to maintain the classification.

How to keep control of Differential pressure?

Overpressure systems in cleanrooms require complex planning for the incoming and outgoing air. Air volume controllers are installed in each room. An internal motorised damper regulates the air flow.

To achieve this the pressure difference between the cleanroom and a reference has to be converted into a signal which controls the damper.

It is crucial to choose the correct low pressure reference especially when it comes to a cleanroom layout where several rooms are connected (anterooms, corridors etc).

Differential pressure transmitters compare two pressure points and generate signals accordingly. They have two inlet ports for thin tubing enabling two areas of different pressure to be measured. The inlets are usually labelled (+) & (-) for high and low pressure inputs from the rooms.

Air volume controller

It is highly recommended that the **same** low pressure reference is used if there are several connected rooms, perhaps including a corridor. To measure and adjust **Δp** between each cleanroom would lead to pressure fluctuations which should be avoided.

Room	Parameterised Pressure Value (Pa)	Δp Compared to Corridor (Pa)
Anteroom	**+10**	**+10**
Room 1	**+20**	**+20**
Room 2	**+30**	**+30**

*The table shows an example of a 3-room layout, all pressures are compared to a **single reference.***

ROTRONIC AG, Grindelstrasse 6, CH - 8303 Bassersdorf
Tel. +41 44 838 11 11, Fax +41 44 836 44 24, www.rotronic.ch

rotronic MEASUREMENT SOLUTIONS

Application note: N°F027

June 2013

What solution can Rotronic offer?

With the **PF4** differential pressure transmitter Rotronic adds another parameter to its portfolio.

With a robust thermal mass flow sensor integrated internally the **PF4** can detect very small pressure differences between two points. A wide range of output signals enable **Δp** to be monitored continuously and the conditions in the cleanroom controlled. Temperature can also be measured simultaneously with an interchangeable 4-wire Pt100 sensor which can be connected directly, or cable mounted as required.

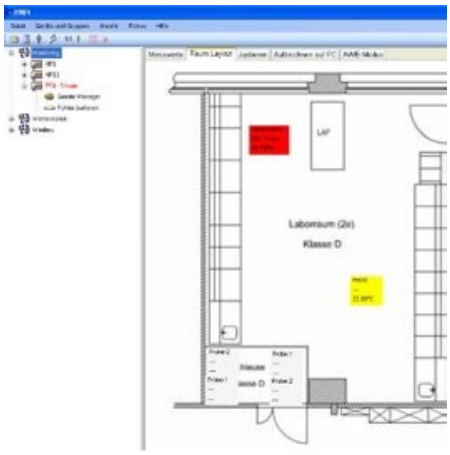

PF4 is fully integrated in Rotronic HW4 software to easily monitor small pressure deviations remotely

Rotronic PF4 differential pressure transmitter:

Technical specifications:

***Sensor* ranges:**

-25...+25 Pa
-50...+50 Pa
-100...+100 Pa
-250...+250 Pa
-500...+500 Pa
-100...+200 °C

Accuracy @23 °C:

±1 % of measurement range

Long-term stability:

<0.3 %/ year

Outputs:

Analogue: 0...1 V, 0...5 V, 0...10 V, 0...20 mA, 4...20 mA
Digital: Ethernet option

Integrated alarm relay:

Programmable time delay & activation period

Configurable response time:

0...30 min.

Adjustment points:

Zero point & 1 reference point

Pressure resistance:

Max. 2 bar

Power supply:

12...40 VDC / 14...28 VAC

Conformity:

FDA 21 CFR part 11, GAMP5

CE/EMC: 2004/108/EC

IP65

PF4 - Differential pressure transmitter

Customer benefits:

Accuracy and sensor technology:

A thermal mass flow sensor works without any moving parts. Therefore it is much more robust then a membrane sensor type. Beside this it is able to provide high accuracy measurements that are repeatable. Additionally, a thermal mass flow sensor is resistant to high overloads of up to 2 bar and dirt particles. The leakage factor of only 180 µl/min is almost insignificant.

Communication:

The PF4 transmitter has the same outputs and service interface available from all Rotronic transmitters. The unit can be configured according to your needs. When connected via the Ethernet HW4 records **Δp** measurements & triggers alarms. The integrated relay can be used to activate visual or audible alarms to warn of instabilities in the cleanroom environment.

Long-term stability:

With a specified accuracy of ±1 % of the measurement range this product meets the high sensor standards set by Rotronic .

Calibration:

Easily close the loop to perform a zero calibration using either HW4 software or through the user interface, conveniently on site. If the actual conditions are known the unit also can be adjusted by entering a gain value.

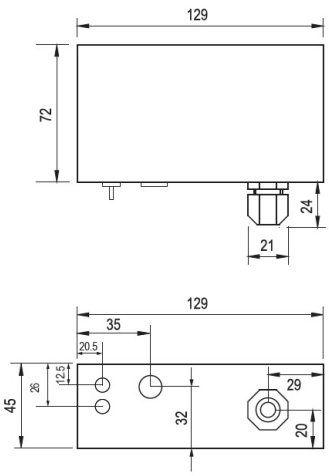

PF4 - Dimensions of the housing

ROTRONIC AG, Grindelstrasse 6, CH - 8303 Bassersdorf
Tel. +41 44 838 11 11, Fax +41 44 836 44 24, www.rotronic.ch

rotronic MEASUREMENT SOLUTIONS

Contact us:

Rotronic is represented in more than 40 countries around the world. An up-to-date list of all our partners is available at www.rotronic.com

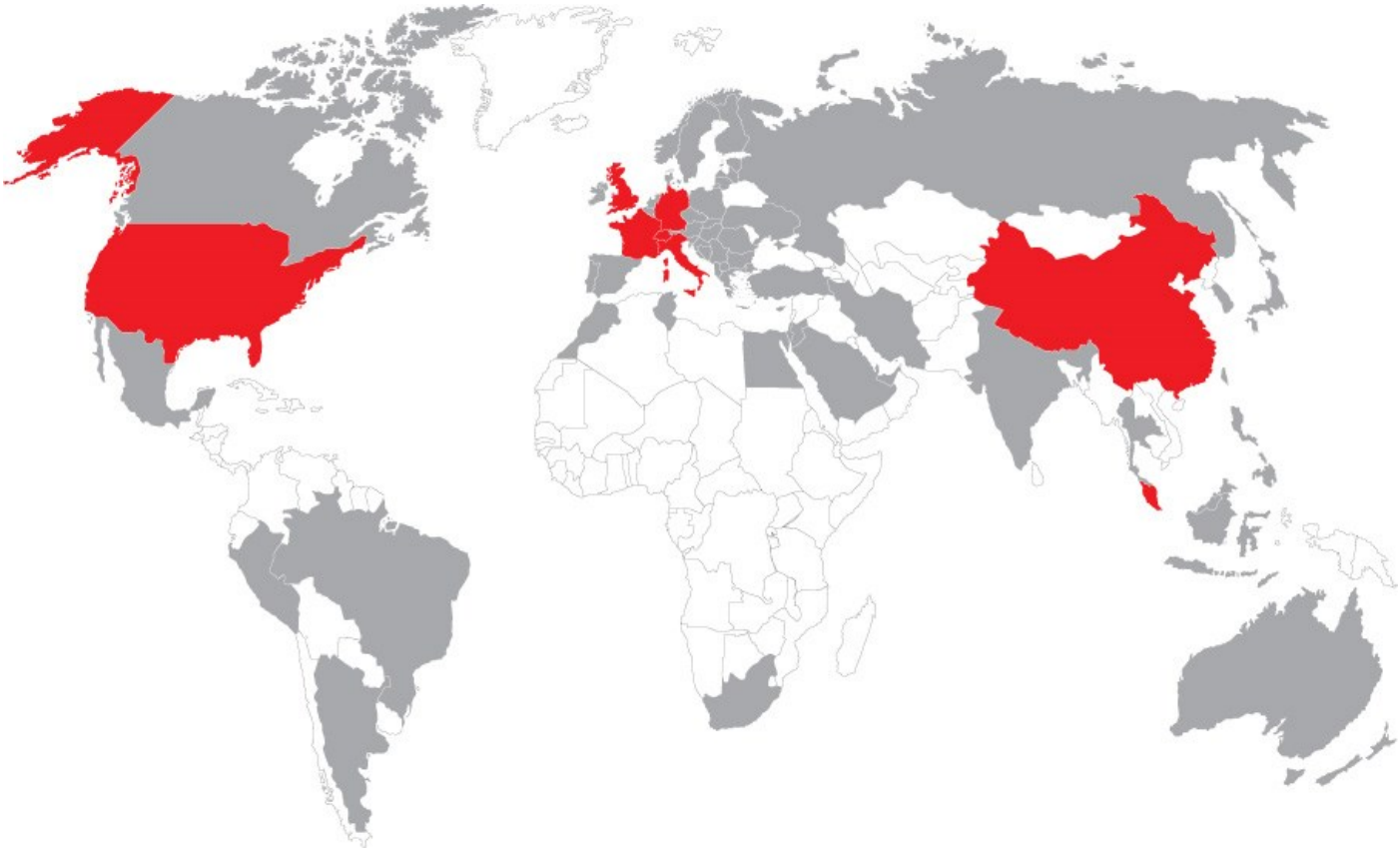

SWITZERLAND
ROTRONIC AG
Grindelstrasse 6,
CH-8303 Bassersdorf
Phone: +41 44 838 11 44
Fax: +41 44 837 00 73
www.rotronic-humidity.com

FRANCE
ROTRONIC Sarl
56, Bld. De Courcerin,
F-77183 Croissy-Beaubourg.
Phone: +33 1 60 95 07 10
Fax: +33 1 60 17 12 56
www.rotronic.fr

SINGAPORE
ROTRONIC South East Asia Pte Ltd
16 Kallang Place #07-04
Singapore 339156
Phone: +65 6294 6065
Fax: +65 6294 6096
www.rotronic.com.sg

GERMANY
ROTRONIC Messgeräte GmbH
Einsteinstrasse 17-23
DE-76275 Ettlingen
Phone: +49 7243 383 250
Fax: +49 7243 383 260
www.rotronic.de

UK
ROTRONIC Instruments UK Ltd.
Crompton Fields, Crompton Way
Crawley, West Sussex, RH10 9EE
Phone: +44 1293 57 10 00
Fax: +44 1293 57 10 08
www.rotronic.co.uk

ITALY
ROTRONIC Italia srl
Via Repubblica di San Marino, 1
I-20157 Milano (MI)
Phone: +39 02 39 00 71 90
Fax: +39 02 33 27 62 99
www.rotronic.it

USA
ROTRONIC Instrument Corp.
Suite 150, 135 Engineers Road,
Hauppauge, NY 11788
Phone: +1 631 427 38 98
Fax: +1 631 427 39 02
www.rotronic-usa.com

CHINA
ROTRONIC Shanghai Rep. Office
2B, Zao Fong Universe Building, No. 1800 Zhing
Shan West Road, Shanghai 200233
China
Phone: +86 21 644 03 55
Fax: +86 21 644 03 77
www.rotronic-humidity.cn